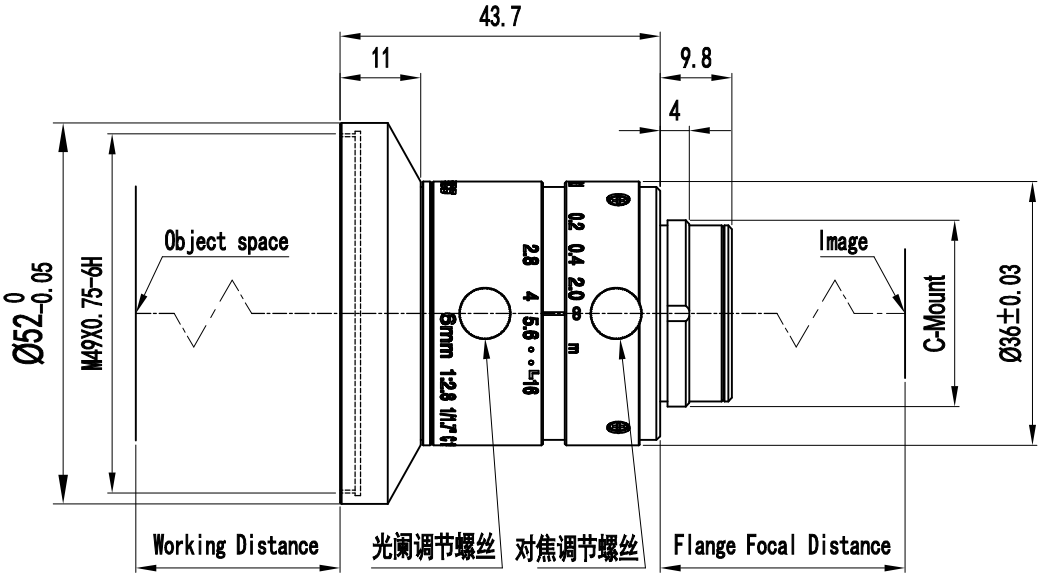

6mm 1:2.8 1/1.7" C 12M					Working Distance (mm)	Optical Magnification	Filed of View (mm) 1/1.7" (7.6mmX5.7mm)	
Focal Length		6mm			-	-	H	V
Max. Aperture Ratio		1:2.8			1000	0.0063X	1206.3	904.8
F/# Range		F2.8-F16			950	0.0066X	1151.5	863.6
Focus Range		100mm-Inf			900	0.0070X	1085.7	814.3
Max. Image Size		1/1.7" (ϕ9.5mm)			850	0.0074X	1027.0	770.3
Working Distance		100mm	350mm	Inf	800	0.0078X	974.4	730.8
Object Dimension	D	181.0mm	549.1mm	/	750	0.0083X	915.7	686.7
	H	144.8mm	439.3mm	/	700	0.0089X	853.9	640.4
	V	108.6mm	329.5mm	/	650	0.0096X	791.7	593.8
Angle of View	D	71.90°	72.17°	72.27°	600	0.0104X	730.8	548.1
	H	60.73°	61.00°	61.11°	550	0.0113X	672.6	504.4
	V	47.32°	47.71°	47.89°	500	0.0123X	617.9	463.4
Optical Distortion		-2.661%	-0.369%	0.990%	450	0.0136X	558.8	419.1
TV Distortion		-0.620%	0.254%	0.706%	400	0.0152X	500.0	375.0
Relative Illumination		74.93%	71.28%	69.05%	350	0.0173X	439.3	329.5
Back Focal Length		8.43mm			300	0.0200X	380.0	285.0
Flange Focal Distance		17.526mm in Air			250	0.0236X	322.0	241.5
Mount		C-Mount			200	0.0289X	263.0	197.2
Filter Screw Size		M49X0.75			150	0.0373X	203.8	152.8
Operating Temperature		-20℃ ~ +60℃			100	0.0525X	144.8	108.6
Storage Temperature		-20℃ ~ +60℃			/	/	/	/
Weight		116g			/	/	/	/

材料（环保）

DZO 东正光学 DongZheng Optics

名称
DZO_LA0628A_1712_外形规格图

设计	审核	批准
HGQ `22.08.15		

图号

图样标记	单位	比例	数量	页码
	mm	1:1	1	1/1

标记	处数	位置分区	变更号	签字	日期

描图
旧底图登记号
底图登记号

A4